Innovative Conception

Fig-3

(Would not work)

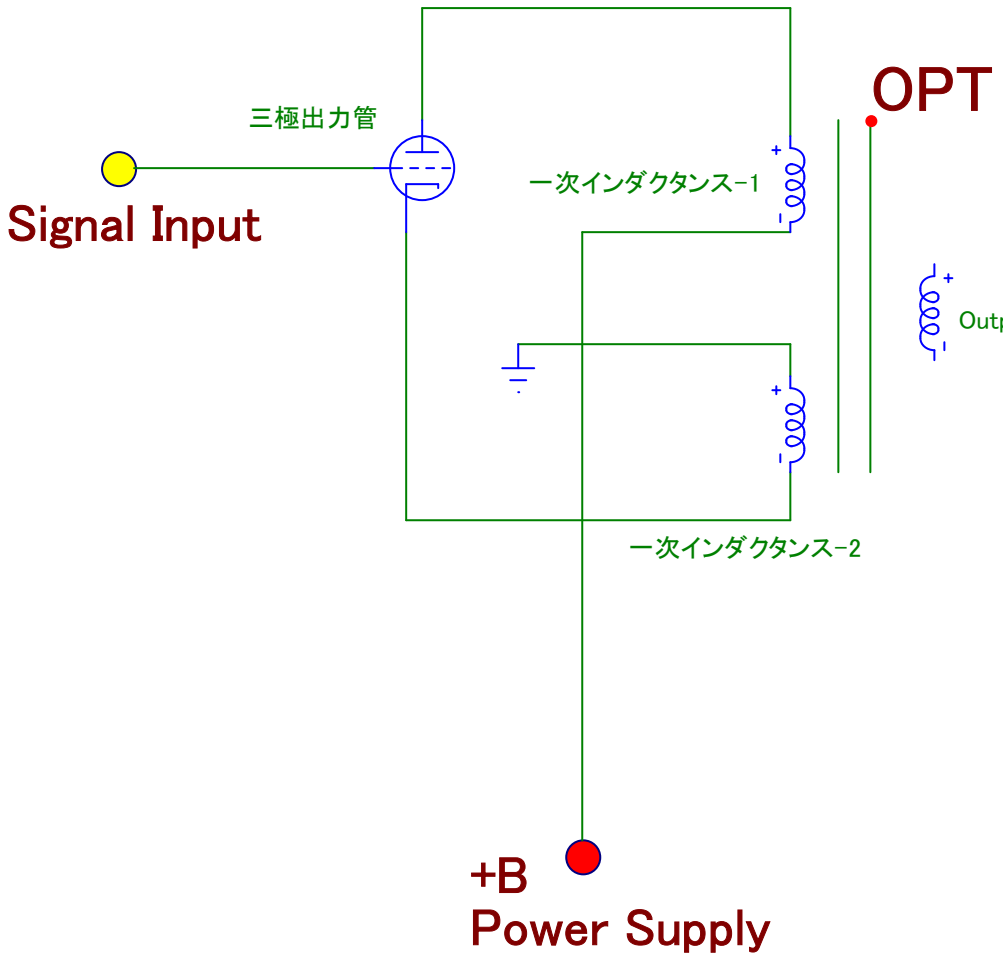

Innovative Investigation

Fig-4
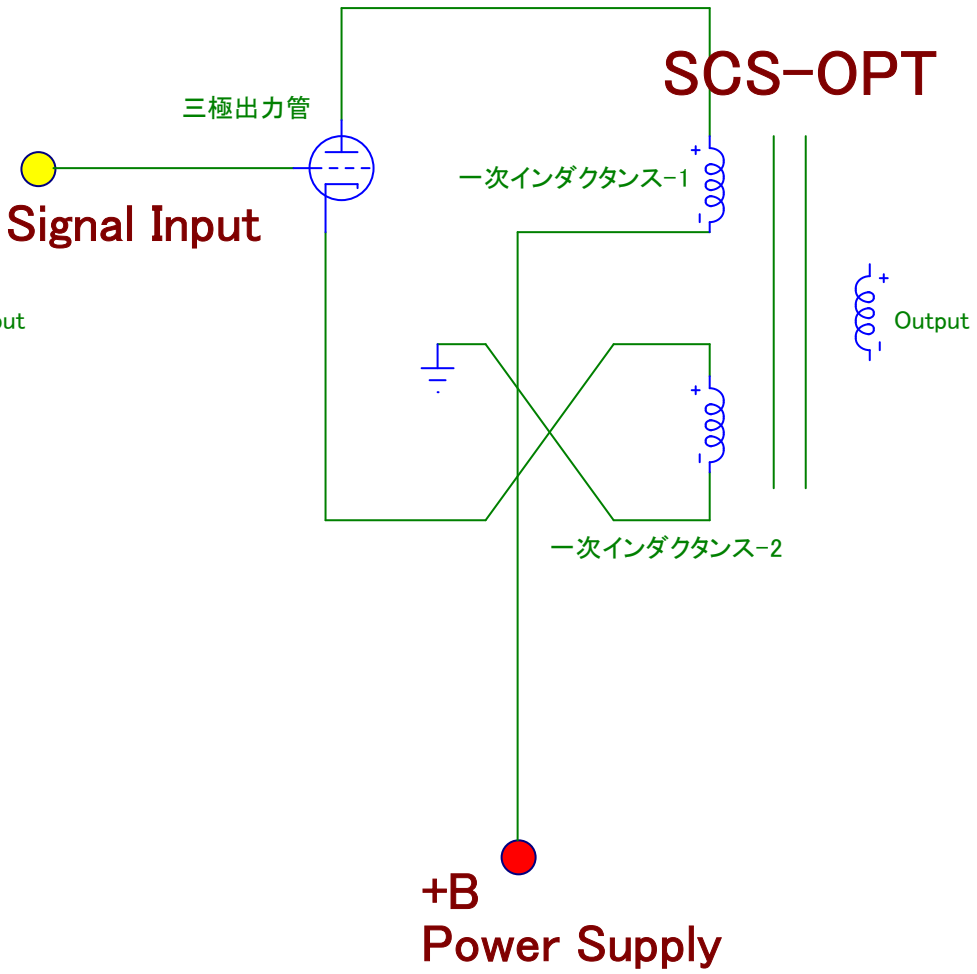
Congratulations