A1 Single Ended

Fig-1

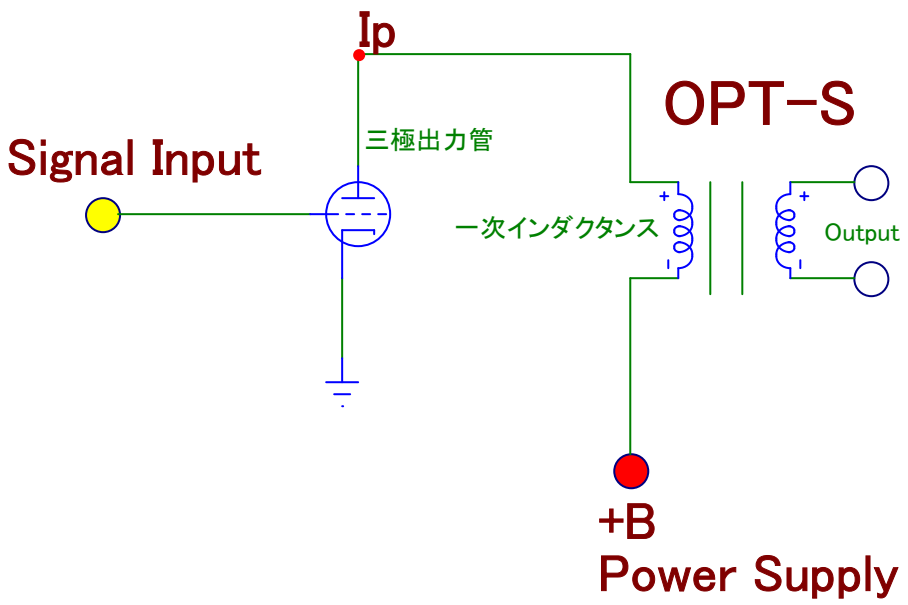

AB1 Push-Pull
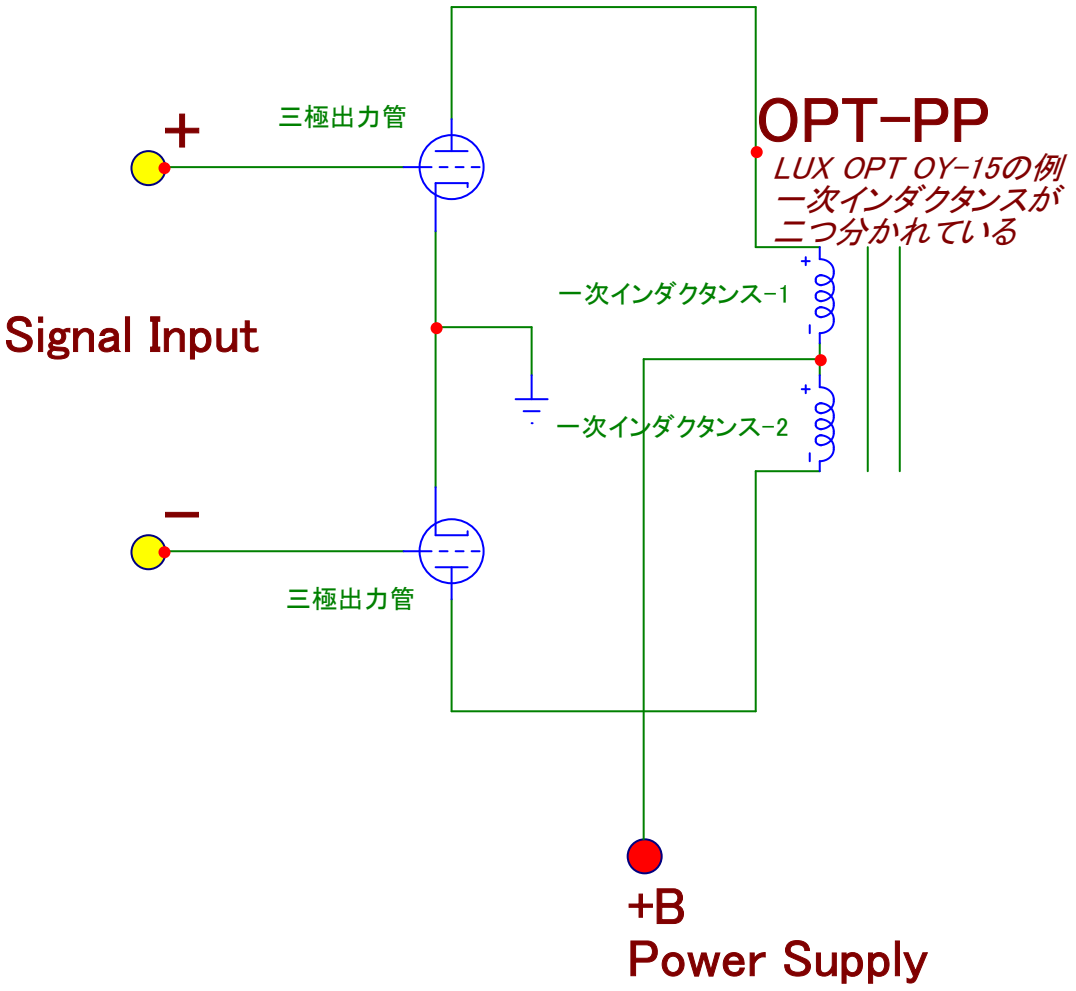
Fig-2